Culligan quench

956

Freestanding Water and Ice Dispenser

- Dispenses cold, hot, and room temperature water
- Produces up to 44 lbs. of tulip-shaped ice in 24 hours*
- Stores up to 13.2 lbs. of ice
- Advanced reverse osmosis filtration technology
- Touchless sensor dispensing
- In-tank LED UV to maintain cleanliness
- Taller ergonomic height for no-bend dispensing









Product Details

Enhance your guests, clients, and employees' hydration experience by offering ice from the 956! The 956 offers cold, hot, and ambient filtered drinking water as well as tulip-shaped ice on-demand. With its dual LED UV-C light to maintain cleanliness, antimicrobial surface protection, and touchless sensor dispensing, the 956 offers advanced hygienic features and peace of mind from cross-contamination. The 956 fits in any break room, office kitchen, or waiting room with a sleek glass front and ergonomic no-bend design.

Standard capacity

Contemporary Design with Advanced Features

- Single spout for cold, hot, and room temperature water
- Produces 44 lbs. of tulip-shaped ice per day*
- Stores up to 13.2 lbs. of ice
- Large 10" dispensing area
- Hot water safety dispensing
- Reverse osmosis filtration
- Sanitary touchless sensor dispensing
- Antimicrobial surface protection
- Taller no-bend ergonomic design
- Dual LED UV-C light to maintain water cleanliness
- Stainless steel storage tanks to maintain water cleanliness
- Leak protection system
- Energy-efficient operation

Specifications

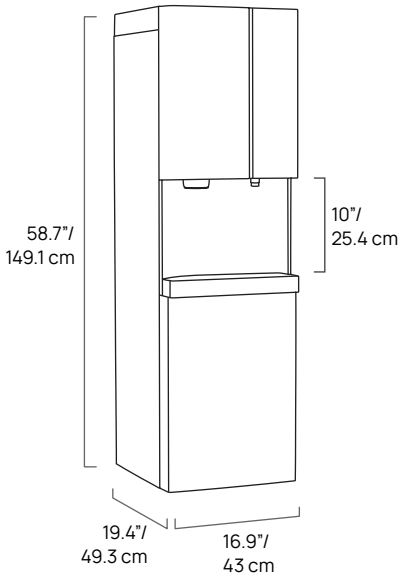

Dimensions	58.7" h x 16.9" w x 19.4" d/ 149.1 cm h x 43 cm w x 49.3 cm d
Dispensing Area Height	10"/25.4 cm
Weight	115 lbs/52 kg
Cold Tank Capacity	1.1 gal/4.2 liters
Hot Tank Capacity	0.75 gal/2.8 liters
Ambient Tank Capacity	4.5 gal/16.9 liters
Ice Output	44 lbs/day (20 kg/day)*
Ice Storage	13.2 lbs/6 kg
Recommended Water Pressure	40 - 70 PSI
Rated Voltage/Frequency	110v/60Hz
Power Consumption	6.0 amps (2.83 kWh/24 hours)
Drain Requirement	Drain required within 20 ft.
Model Number	956

* Ice production can change based on source water and ambient air temperature.

Culligan Quench products are certified by independent authorized 3rd party laboratories in accordance of appropriate industry standards. To find out more about which certifications your product may have, please contact us.

© 2024 Culligan Quench. All rights reserved. 956-001-OCT24